Painting Guide
-
KCW41-E
Outdoor Transportation Wedge Camera

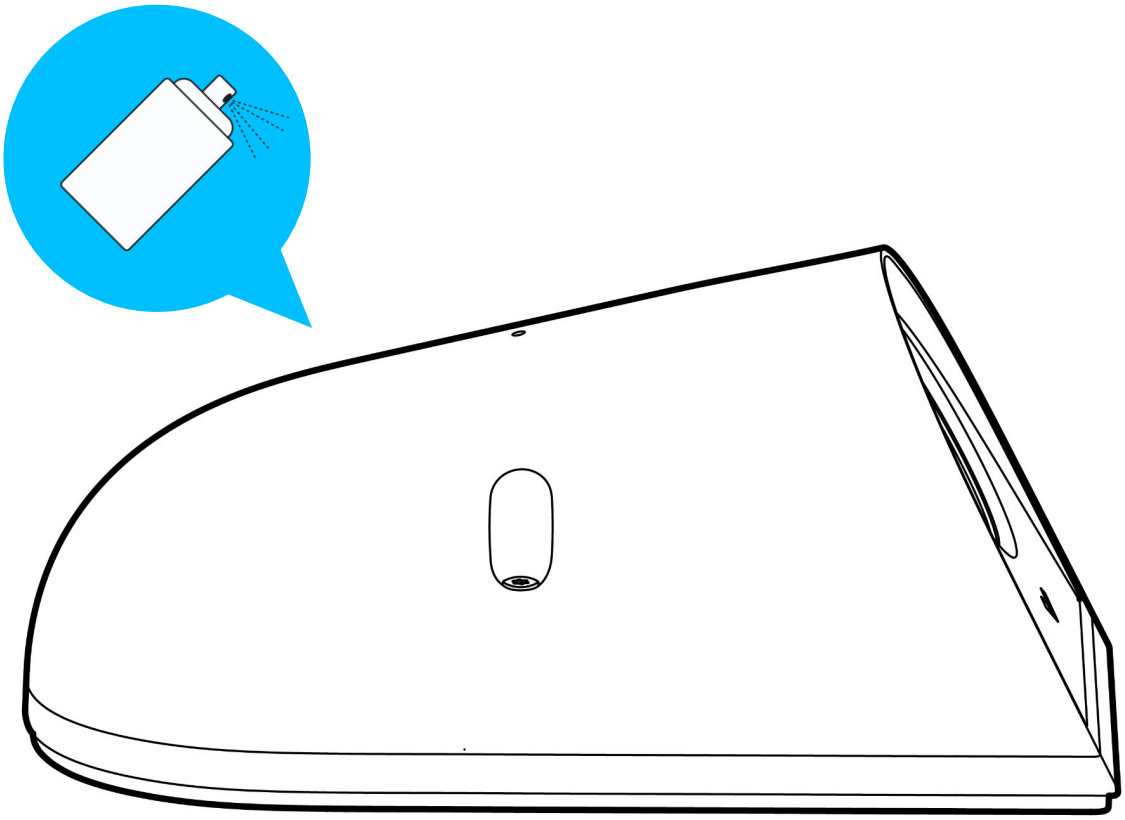

Document

Document Details

Version

V1.0 20261123
(V1.0 published 20261123)
Document ID: KCW41-E Painting Install Guide

Product Models

These instructions pertain to models:

- KCW41-E

© Copyright 2026 Verkada Inc. All rights reserved.

Verkada and the Verkada logo are registered trademarks or service marks of Verkada Inc. (“Verkada”). All other trademarks are the property of their respective owners.

Verkada may make changes to this document at any time without notice. The information presented herein may be inaccurate or outdated, and Verkada is under no obligation to maintain it. ALL INFORMATION IS PROVIDED “AS-IS” AND WITHOUT ANY WARRANTIES, IMPLIED, EXPRESS, OR OTHERWISE. VERKADA DISCLAIMS LIABILITY FOR ALL DAMAGES, INCLUDING WITHOUT LIMITATION ANY DIRECT, INDIRECT, SPECIAL, INCIDENTAL, PUNITIVE, OR CONSEQUENTIAL DAMAGES, ARISING OUT OF USE OF THIS DOCUMENT.

Any intellectual property rights relating to Verkada products are and shall remain Verkada’s exclusive property. Use of any Verkada product is subject to Verkada’s end user agreement or other executed agreement with Verkada. No license, either expressed or implied, to use or distribute any Verkada product is granted under this document.

This document may not be sold, resold, licensed or sublicensed and may not be transferred without Verkada’s prior written consent. No part of this document may be reproduced in whole or in part without the express written consent of Verkada.

Overview

Preparing for Painting: *Follow the instructions to disassemble the device. Clean all parts thoroughly.*

Cover all openings (screw holes, and LEDs,) to ensure proper function after painting.

Applying Paint: Apply primer before painting, follow the manufacturer's instructions.

Warranty Information

Painting the camera does not void the warranty when the instructions in this guide are followed. Damage caused by improper preparation, painting, or reassembly is not covered.

Darker paint can reduce the camera's maximum operating temperature. Use a lighter color in hot climates. Black has the greatest thermal impact.

Disassemble Camera

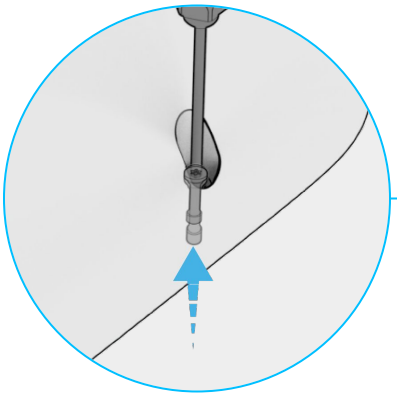

Apply finger pressure on the underside of the captive screw while unscrewing it with the T10 Torx Security Screwdriver.

The captive screws will disengage.

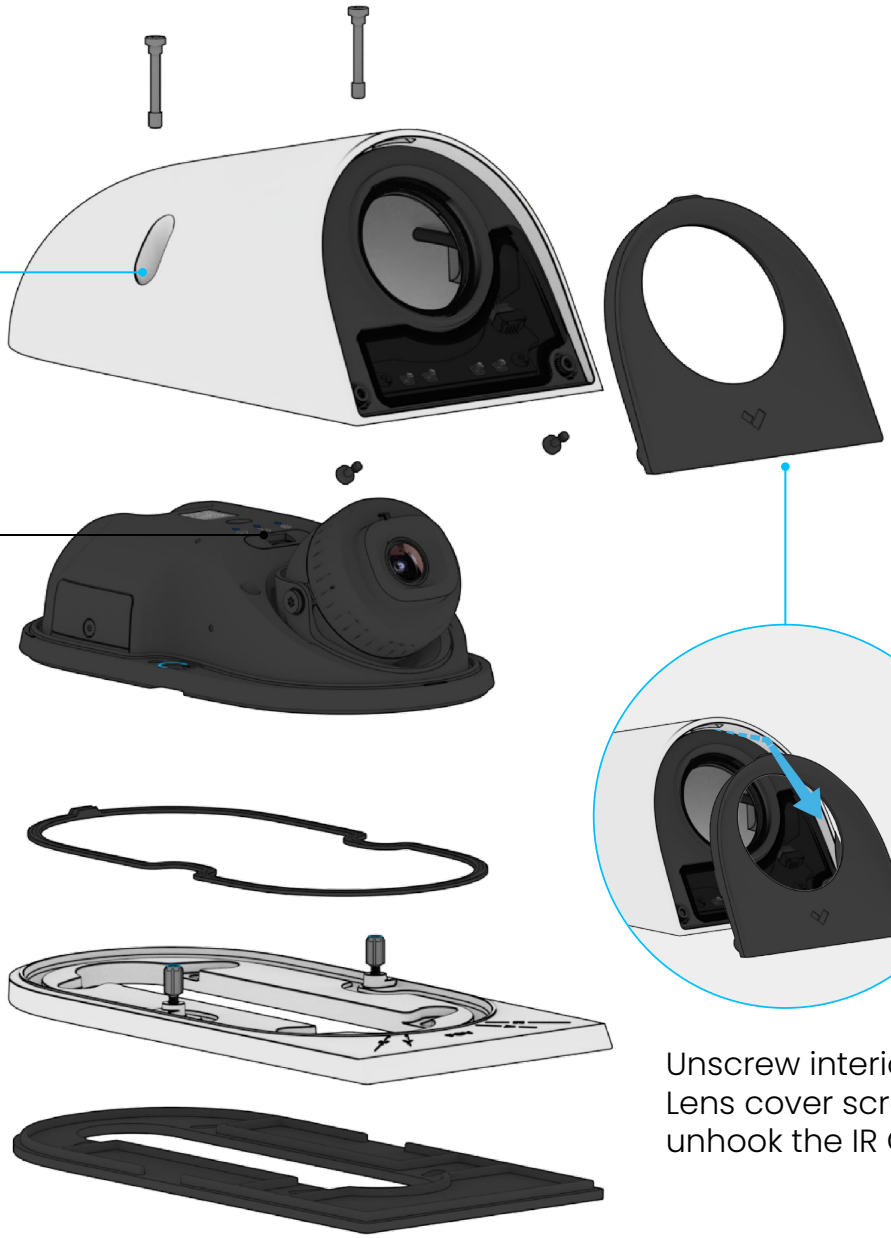

Unscrew interior IR Lens cover screws to unhook the IR Cover.

⚠ Warning

If painting camera after installation, please make sure the IR cable is disconnected when taking off the Top Cover.

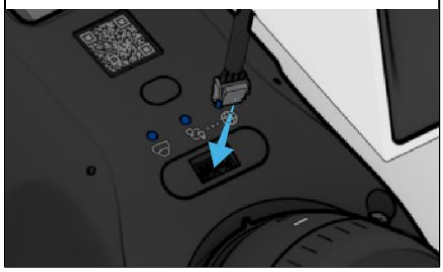

Separate all the pieces that will be painted on.

Masking & Painting Parts

Retrieve the Masking Cover and place in the IR Cover area. Cut two masking tape to cover the LED light and the thumbscrews on the Mount Plate.

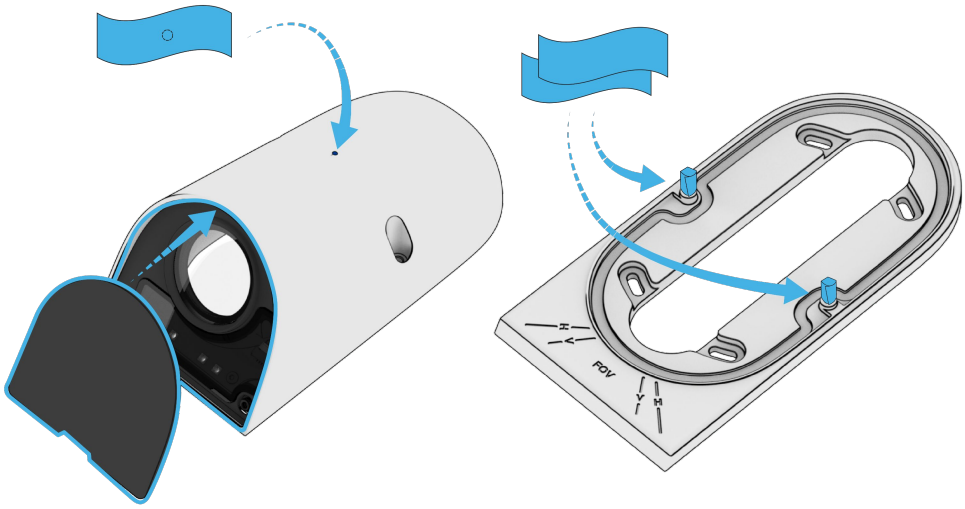

Painting

Place on blocks so parts do not stick to surface.

Follow paint manufacturers instructions and paint the parts.

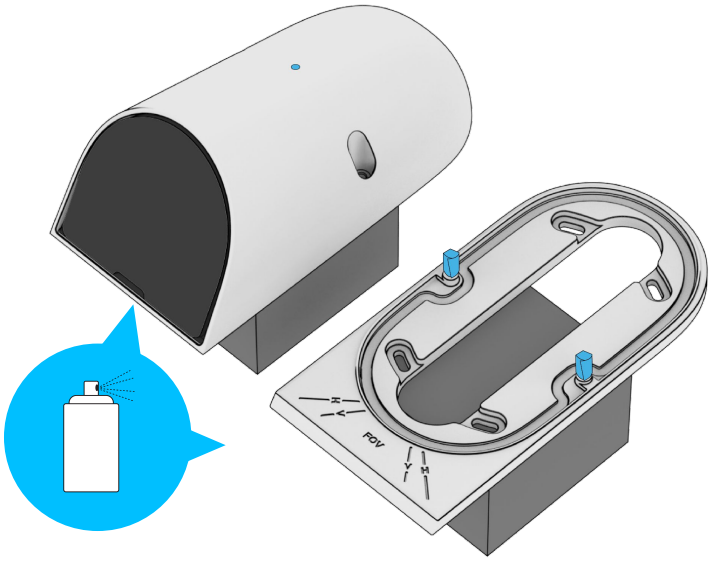

Note: Do not paint the inside of the Top Cover.

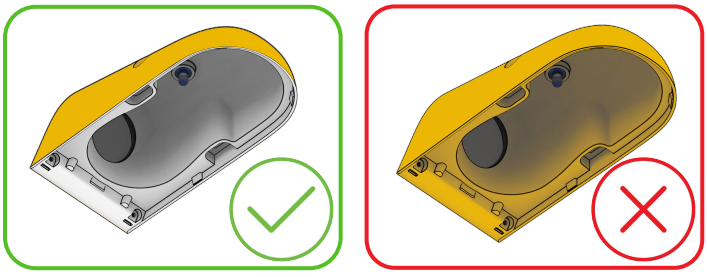

Unmasking

Let dry completely (or per the paint manufacturing instructions) before unmasking.

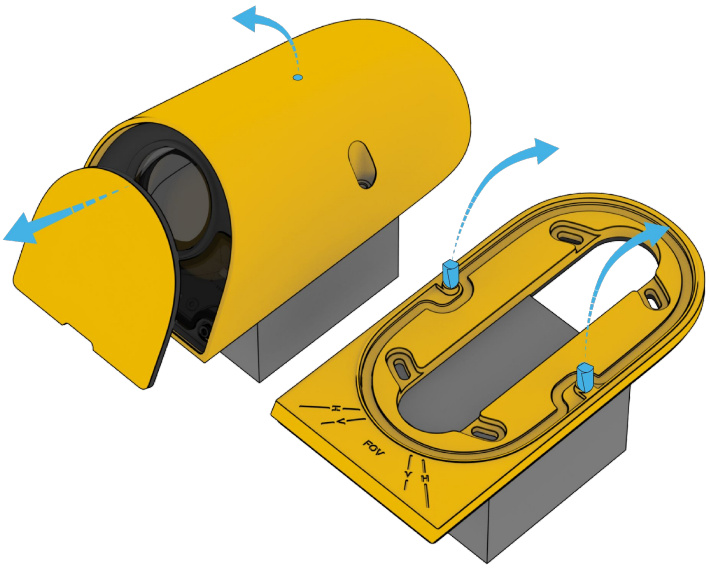

Re-assembly & Next Steps



Press the two captive screws back into the Top Cover

Retrieve the two IR Cover screws and resecure back into the Top Cover.

Re-assemble all the parts together.

Continue the rest of the instructions on the *Verkada KCD41-E (Indoor/Outdoor Transportation Dome Camera) Install Guide.*

Appendix

Support

Thank you for purchasing this Verkada product. If for any reason you're experiencing issues or need assistance, please contact our 24/7 Technical Support Team immediately.

Sincerely,
The Verkada Team
verkada.com/support