Install Guide

KCF61-E Indoor/Outdoor Transportation Fisheye Camera

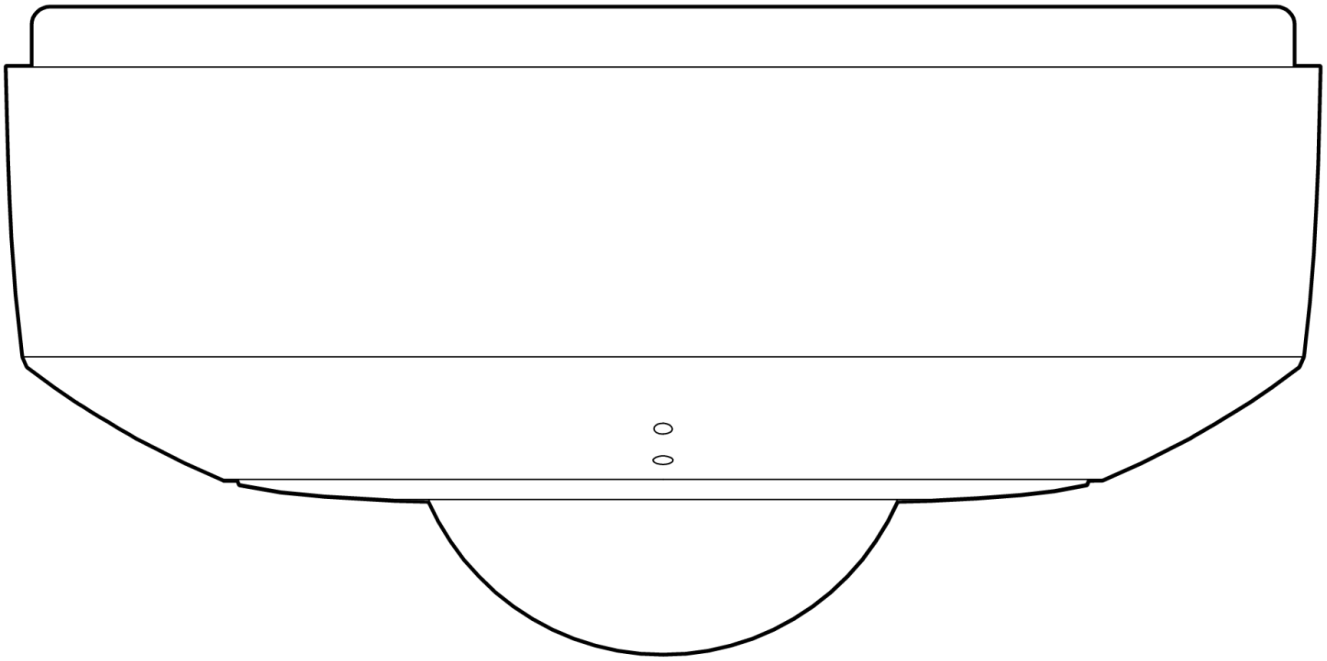

Document

Document Details

Version

V1.0 20261120
(V1.0 published 20261120*)*
Document ID: KCF61-E Install Guide

Firmware

Firmware version can be verified on Verkada Command command.verkada.com.

Product Models

This install guide pertains to models:

- KCF61-E

© Copyright 2026 Verkada Inc. All rights reserved.

Verkada and the Verkada logo are registered trademarks or service marks of Verkada Inc. ("Verkada"). All other trademarks are the property of their respective owners.

Verkada may make changes to this document at any time without notice. The information presented herein may be inaccurate or outdated, and Verkada is under no obligation to maintain it. ALL INFORMATION IS PROVIDED "AS-IS" AND WITHOUT ANY WARRANTIES, IMPLIED, EXPRESS, OR OTHERWISE. VERKADA DISCLAIMS LIABILITY FOR ALL DAMAGES, INCLUDING WITHOUT LIMITATION ANY DIRECT, INDIRECT, SPECIAL, INCIDENTAL, PUNITIVE, OR CONSEQUENTIAL DAMAGES, ARISING OUT OF USE OF THIS DOCUMENT.

Any intellectual property rights relating to Verkada products are and shall remain Verkada's exclusive property. Use of any Verkada product is subject to Verkada's end user agreement or other executed agreement with Verkada. No license, either expressed or implied, to use or distribute any Verkada product is granted under this document.

This document may not be sold, resold, licensed or sublicensed and may not be transferred without Verkada's prior written consent. No part of this document may be reproduced in whole or in part without the express written consent of Verkada.

What's in the Box

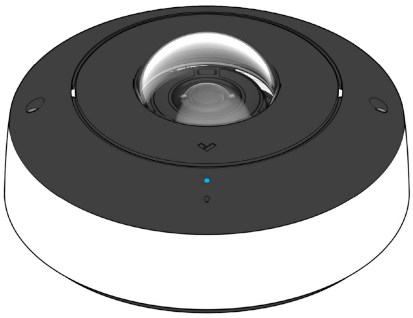

Indoor/Outdoor Fisheye Camera

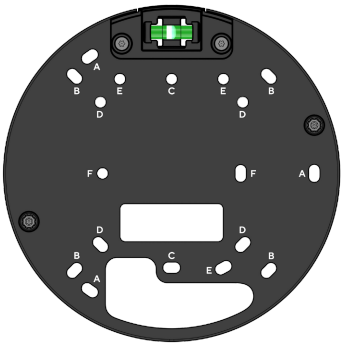

Mount Plate
(Attached to camera)

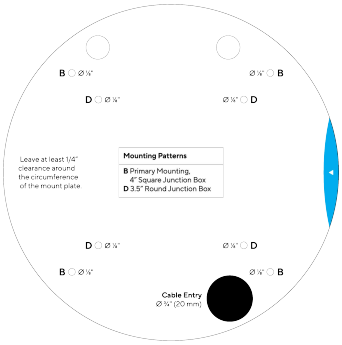

Mount Plate Template



Self Tapping Screws (4 pcs)
Length: 19mm **Diameter:** 4mm
Drive: #2 Phillips

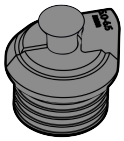

Cable Gland (1 pc)
Size: 5.0-6.5mm
(Attached to camera)

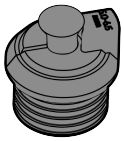

Cable Gland (1 pc)
Size: 6.5-7.5mm

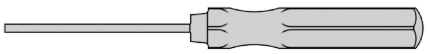

T10 Torx Security Screwdriver

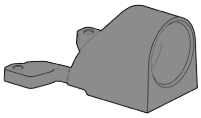

Conduit Adapter

What you'll need

- A working internet connection
- 802.3af/802.3at PoE Power over Ethernet (PoE) switch or a PoE injector. For operation below -20° C, use 802.3at PoE.
- A smartphone or laptop
- A Phillips screwdriver or power drill with a Phillips driver bit
- ⅛ inch (3mm) drill bit for pilot holes
- Cat5-Cat8 Ethernet cable with a 0.2-0.3 inch outside diameter (5-7.5mm)

Connect

For easy registration and setup, scan the QR code on the product.

If you prefer to manually register your product, please proceed to: verkada.com/start

Overview

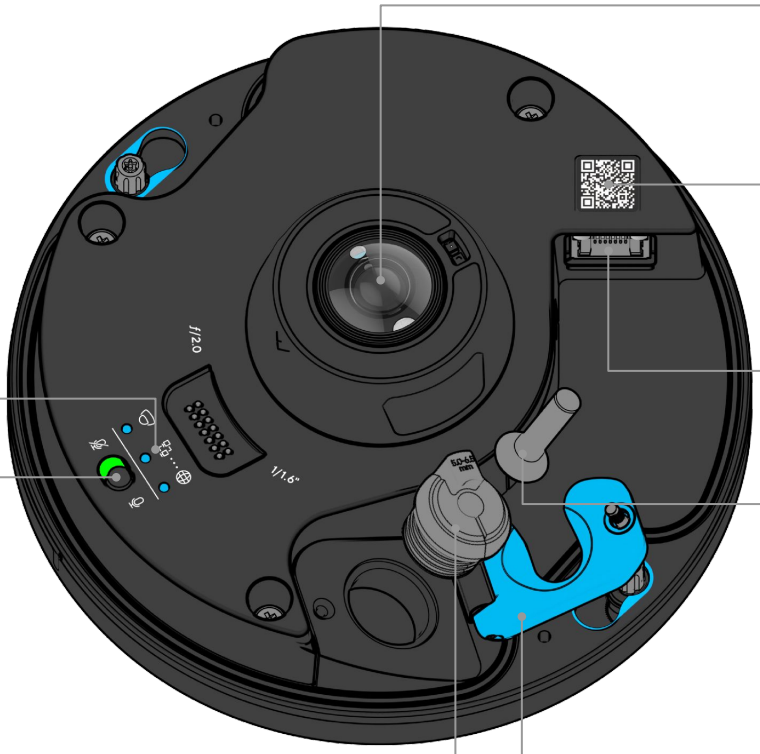

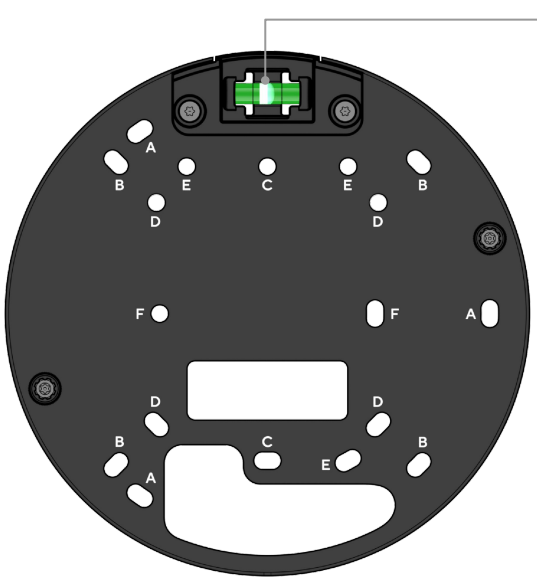

Mount Plate

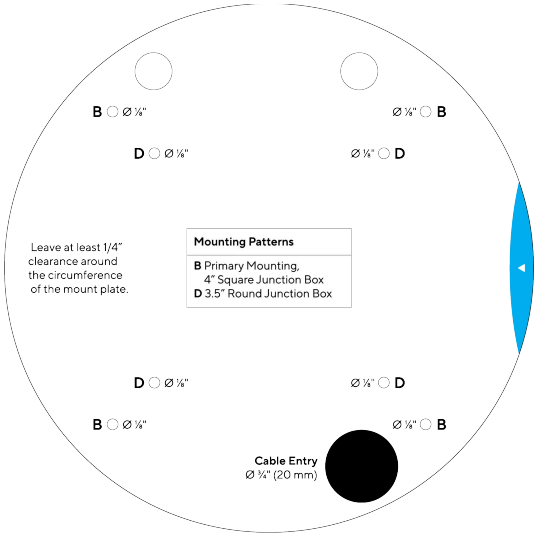

Adhesive Mounting Template

Mount Plate

- **A** Wall Mount
- **B** 4" Square Junction Box
- **C** Single Gang Junction Box
- **D** 3.5" Round Junction Box
- **E** Double Gang Junction Box
- **F** European Junction Box

Recommended Mounting Scenarios

The Field of View allowed by the camera is illustrated below. Take this information into consideration as it is being mounted on the vehicle.

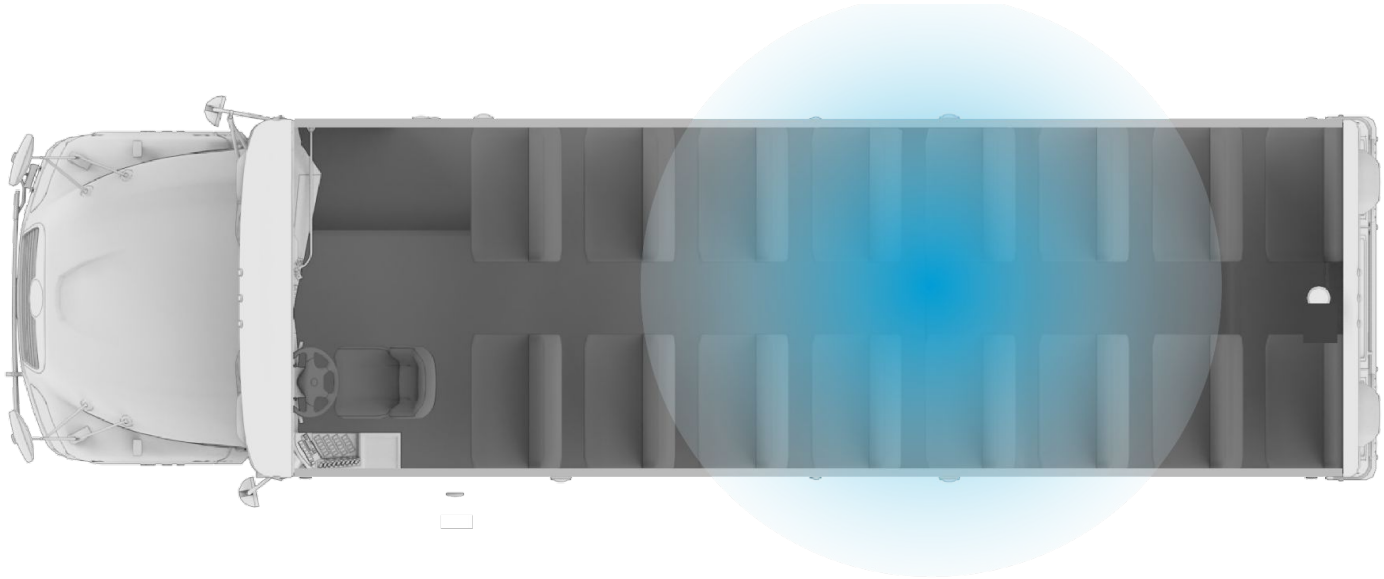

The range of view is up to 66 ft. Recommended to place in the center of vehicle. If vehicle is larger, two maybe needed.

Microphone Switch

The microphone switch allows you to physically disconnect the microphone in the camera unit, guaranteeing that no audio will be recorded.

Camera Audio is enabled by default.

To disable Camera Audio, move the switch into the left position.

Alternatively, Camera Audio can be disabled in your Command account.



Microphone Switch

Microphone Enabled

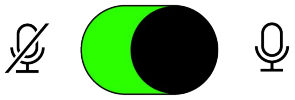

Microphone Disabled

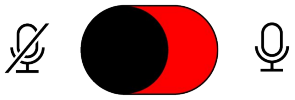

Exterior LED Behavior

General operation

- **Solid Blue**
  Camera is running, connected, and recording data.
- **Solid Orange**
  Camera is on and booting up.
- **Flashing Orange**
  Camera is updating firmware.
- **Flashing Red**
  Specific error, see “Network errors” below.
- **Solid Red**
  Contact support.

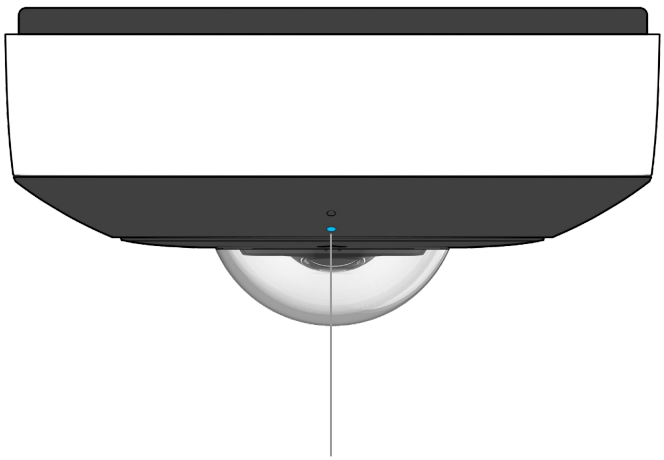

Status LED

Network errors

When the camera top cover is on, an error will be communicated through the outer Status LED, which will flash a specific number of times depending on the error state.



Example of **5 Red** flashes on Outer Status LED

1 Red - No IP Address
Camera has not received an IP address.

2 Red - Duplicate IP
Camera has detected duplicate IP addresses on the LAN.

3 Red - No Gateway
Camera is not able reach the configured Gateway.

4 Red - No Switch
Camera is connected with PoE, but unable to connect to the Switch.

5 Red - DNS error
Camera is not able to resolve Verkada hostnames.

6 Red - NTP Error
Camera is not able to receive a response from the NTP Server.

7 Red - Not Connected to Command
Verkada endpoints are not reachable after boot up.

Interior LED Behavior

General operation

- **Solid Blue**
  Camera is running, connected, and recording data.
- **Solid Orange**
  Camera is on and booting up.
- **Flashing Orange**
  Camera is updating firmware.
- **Flashing Red**
  Specific error, see “Network errors” below.
- **Solid Red** (x3)
  Contact support

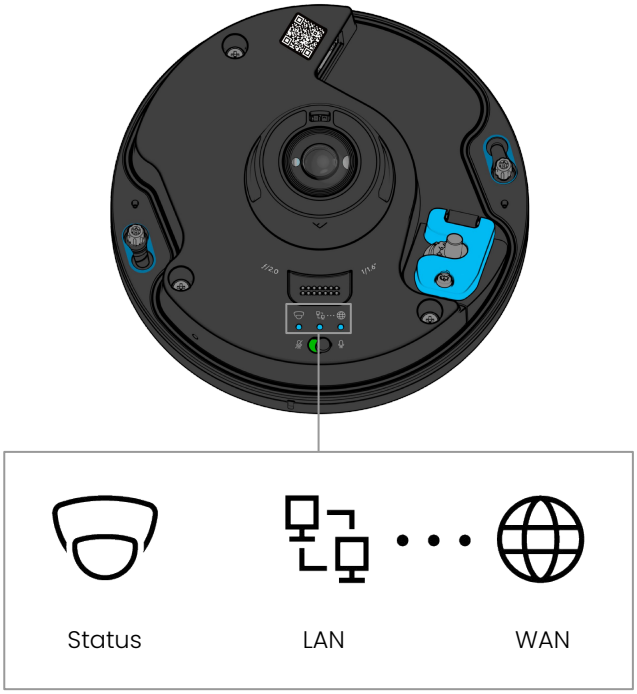

Network errors (Interior ‘Debug’ LEDs)

When the camera top cover is removed, the specific error will be communicated locally on the LAN or WAN debug LED, while the device Status LED will show solid red.



Example of **2 Red** flashes on LAN Debug LED

LAN errors

1 Red - No IP Address
Camera has not received an IP address.

2 Red - Duplicate IP
Camera has detected duplicate IP addresses on the LAN.

3 Red - No Gateway
Camera is not able reach the configured Gateway.

4 Red - No Switch
Camera is connected with PoE, but unable to connect to the Switch.

WAN errors

1 Red - DNS error
Camera is not able to resolve Verkada hostnames.

2 Red - NTP Error
Camera is not able to receive a response from the NTP Server.

3 Red - Not Connected to Command
Verkada endpoints are not reachable after boot up.

Preparation 1/2

Use the provided T10 Torx security screwdriver to loosen the screws and lift the top cover of the camera.

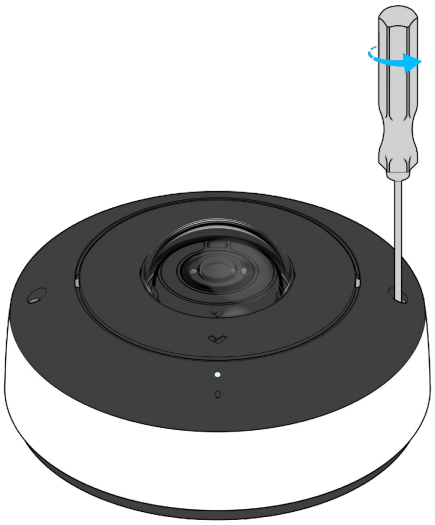

Lift the top cover off of the camera.

Remove and discard the desiccant on the camera.

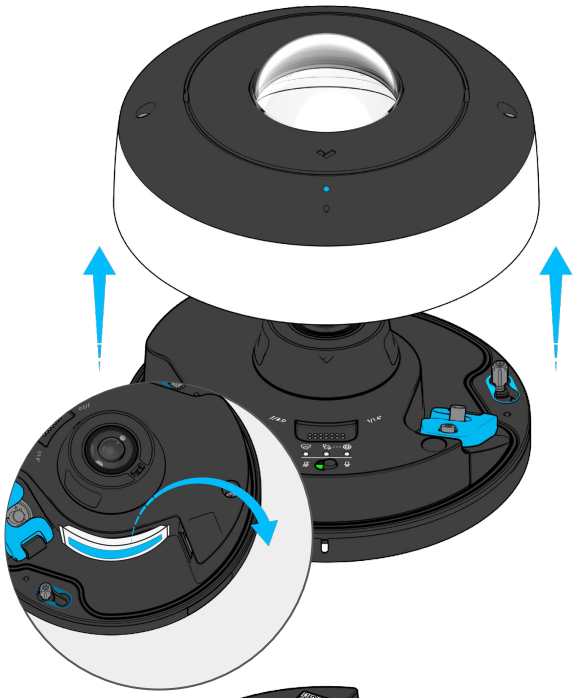

To remove the mount plate, loosen the mount plate screws with the provided T10 Torx Security Screwdriver and twist the camera counter clockwise.

Lift the camera vertically off the mount plate and set aside.

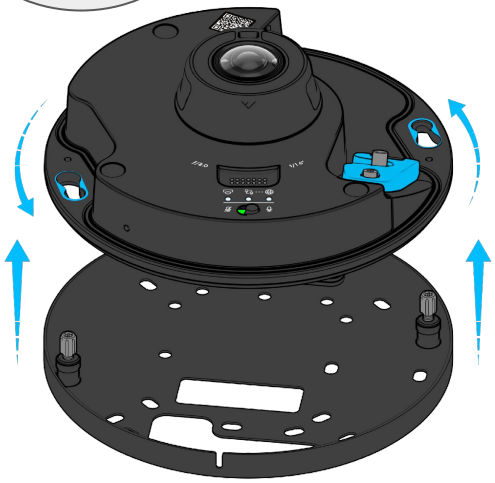

Preparation 2/2

Use the T10 Security Screwdriver to unscrew the latch screw.

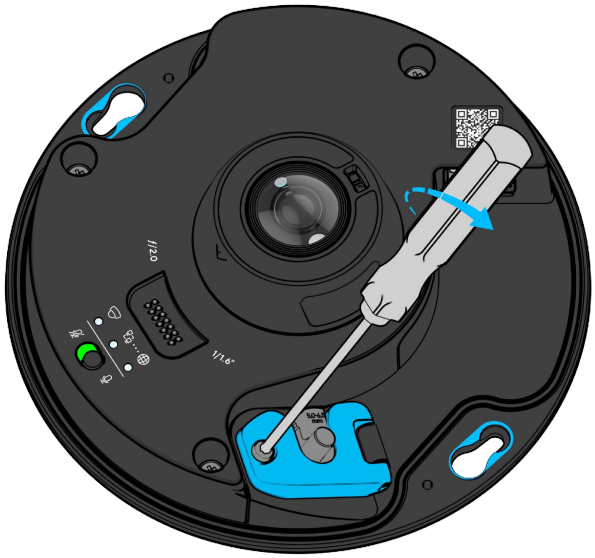

Open the latch.



Remove the cable gland and set it aside.



Mounting 1/5

Use the provided mounting template to mark mount holes. Drill pilot holes and the cable entry hole.

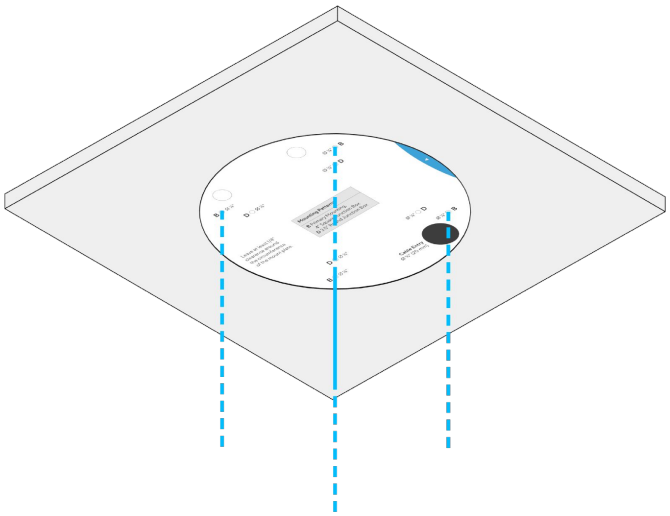

Install the Mount Plate using the four provided Self-Tapping Screws.

*If you wish to add a grounding cable, please refer to the **Grounding**-section in this document.*

If mounting on a wall, the level built in to the mount plate can be utilized to establish a horizontal plane.

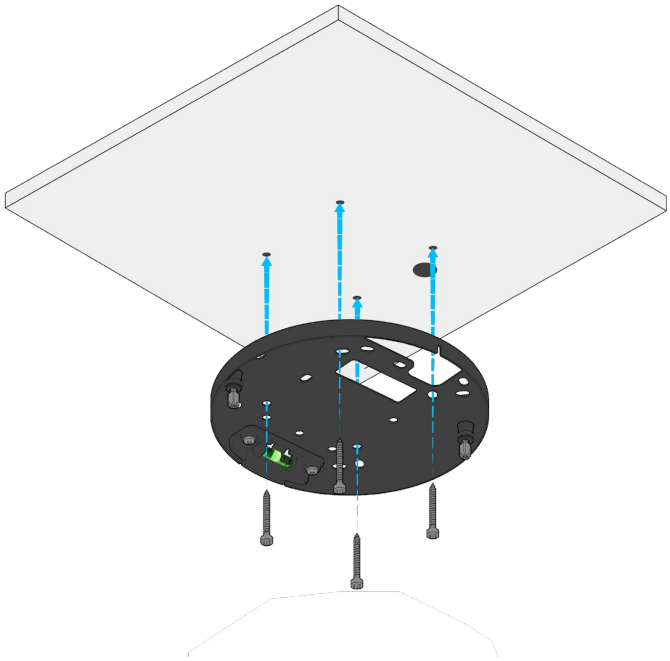

Pull the Ethernet cable through the appropriate hole.

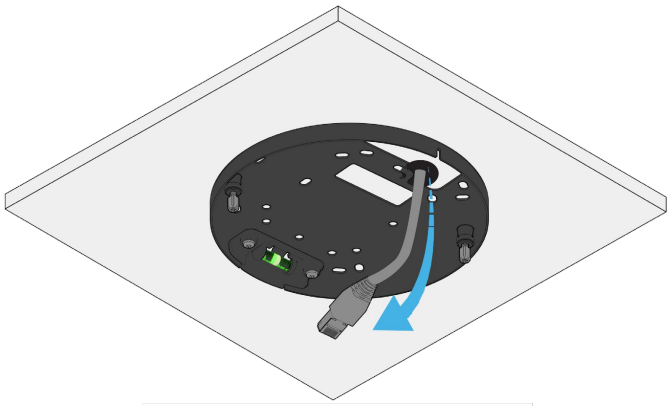

Mounting 2/5

Align the blue holes to the thumbscrews and rotate the camera clockwise.

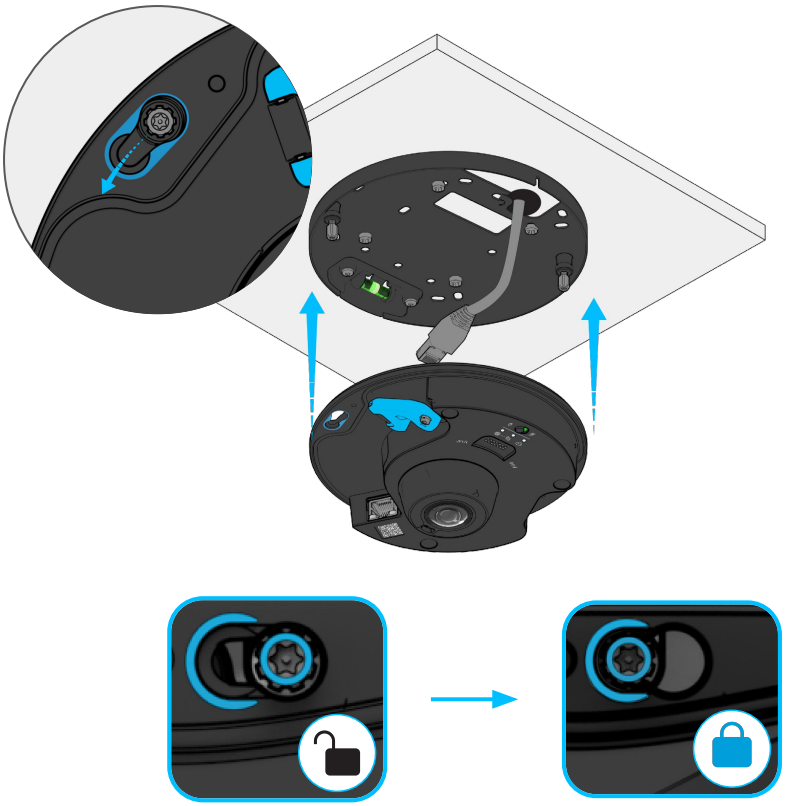

Tighten the thumbscrews using the T10 Security Screwdriver to secure.

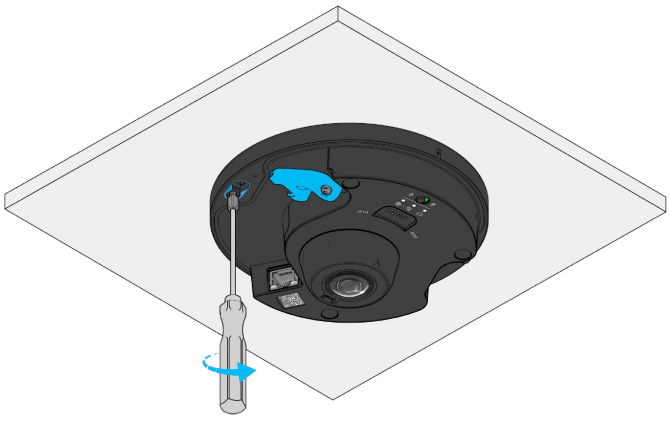

Mounting 3/5

Select the appropriate size cable gland and wrap it around the Ethernet cable.

Connect the Ethernet cable to the camera.

Press the cable gland into cable gland hole.

Make sure that there are no gaps or openings.

Scan QR code to register on Verkada Command.

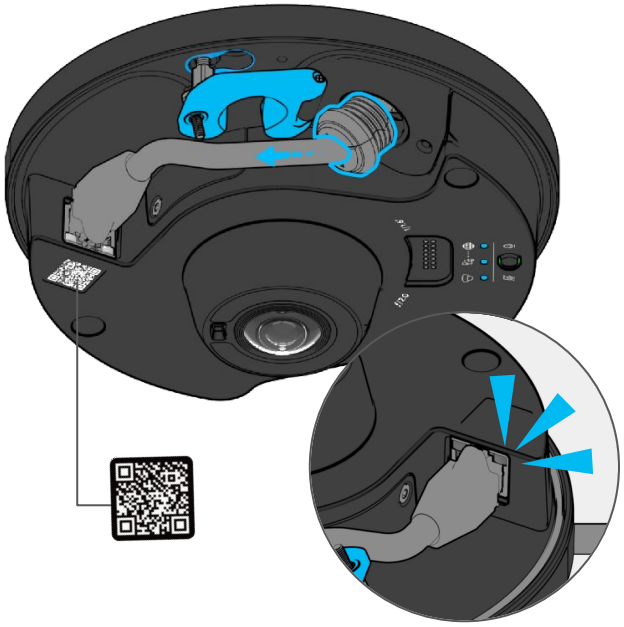

In case of cable slack, press the excess Ethernet cable into the cable gland.

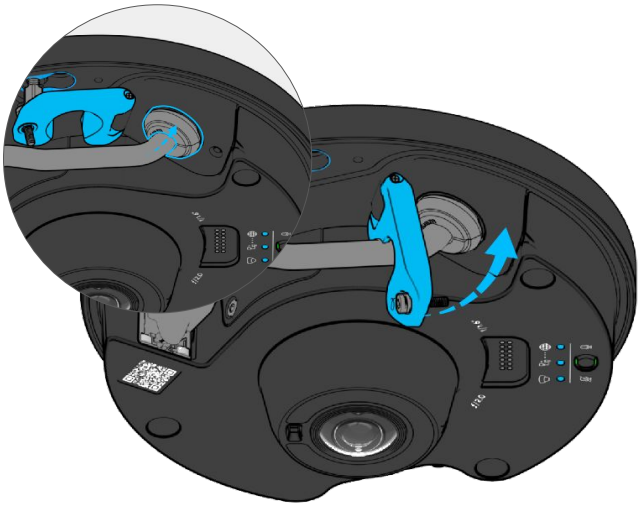

Mounting 4/5

Make sure the slit in the grommet is positioned under the latch. Incorrect installation may result in water ingress that could damage the device.



Ensure that the cable gland is firmly in place with no gaps or unevenness.

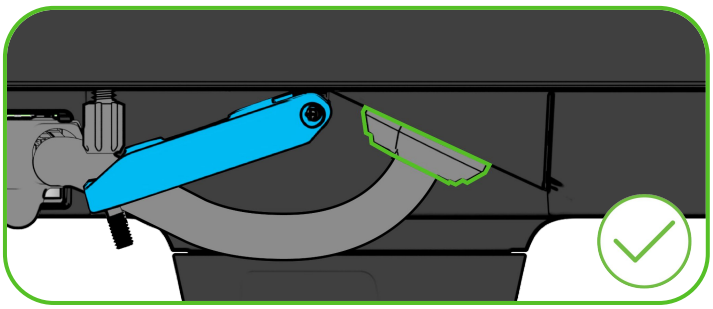

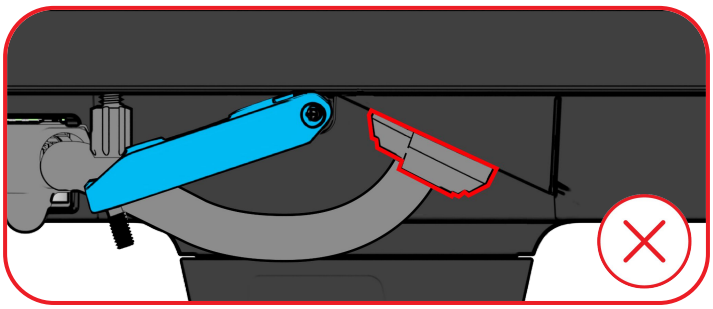

Ensure the latch is fully down and closed before tightening the security screw.

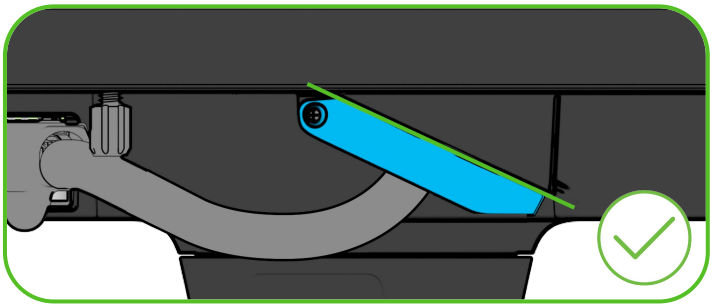

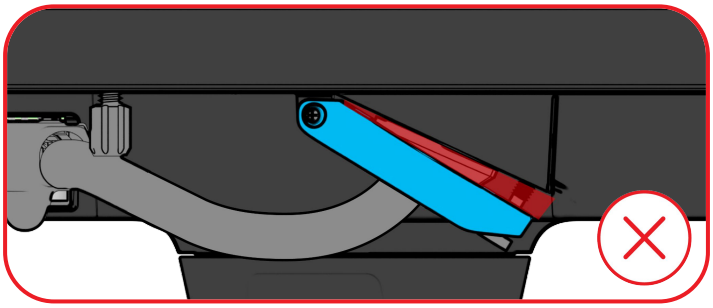

Mounting 5/5

Close the latch and use the provided T10 Security Screwdriver to secure and seal the Ethernet cable.

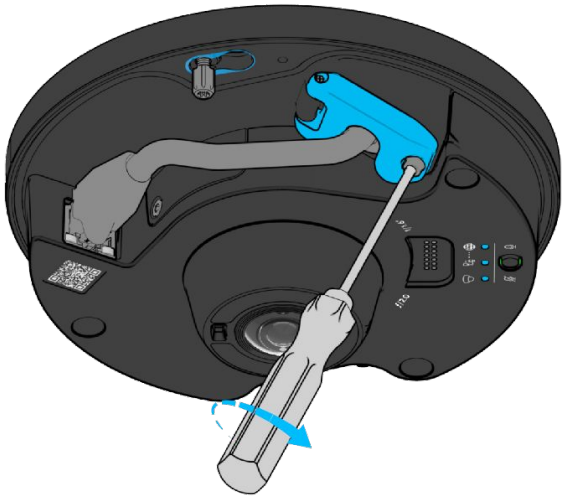

Press the top cover onto the camera and hold it in place.

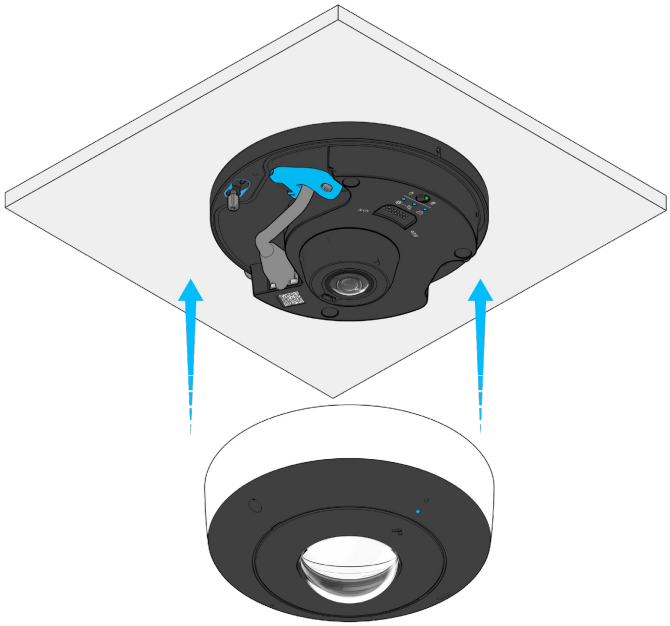

Secure the top cover using the provided T10 Torx Security Screwdriver.

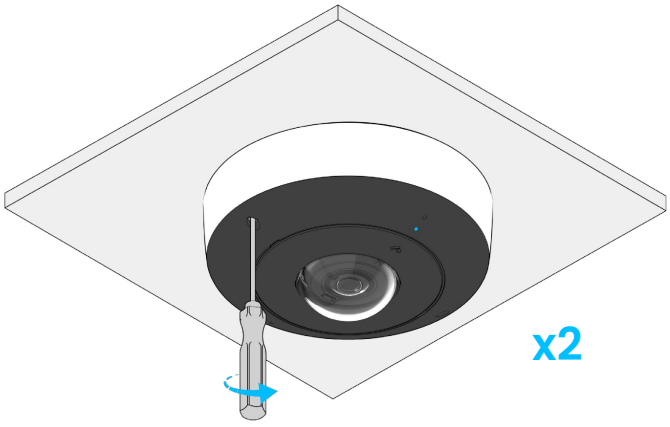

Grounding

In order to attach the ground cable to the camera, perform the following: Align a 20AWG or larger grounding cable with a ring terminal and drive an ¼"-20 x 0.25" screw (not included) through the terminal and into the threaded grounding point on the back of the device as shown on the right.

Attach the other terminal of a grounding cable directly to a circuit breaker, ground rod or earth ground.

This unit is powered by PoE through a UL Listed ITE.

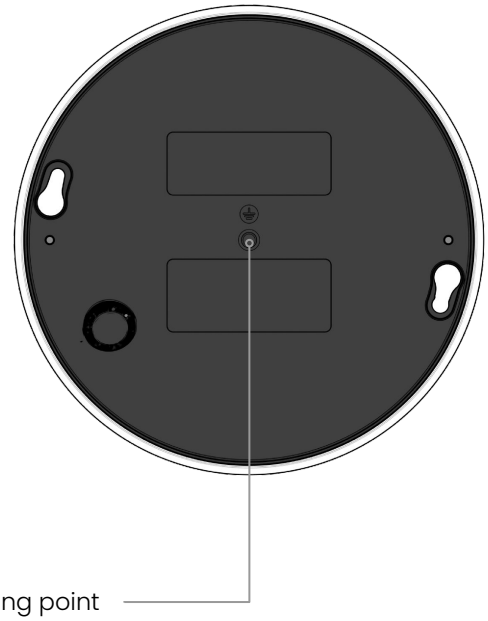

Appendix

Compliance

FCC	This device complies with part 15 of the FCC Rules. Operation is subject to the following two conditions: (1) This device may not cause harmful interference, and (2) this device must accept any interference received, including interference that may cause undesired operation. NOTE: This equipment has been tested and found to comply with the limits for a Class A digital device, pursuant to part 15 of the FCC Rules. These limits are designed to provide reasonable protection against harmful interference when the equipment is operated in a commercial environment. This equipment generates, uses, and can radiate radio frequency energy and, if not installed and used in accordance with the instruction manual, may cause harmful interference to radio communications. Operation of this equipment in a residential area is likely to cause harmful interference in which case the user will be required to correct the interference at his own expense.
ISED	This device complies with ISED's licence-exempt RSSs. Operation is subject to the following two conditions: (1) This device may not cause harmful interference, and (2) this device must accept any interference received, including interference that may cause undesired operation. Le présent appareil est conforme aux CNR d' ISED applicables aux appareils radio exempts de licence. L'exploitation est autorisée aux deux conditions suivantes : (1) le dispositif ne doit pas produire de brouillage préjudiciable, et (2) ce dispositif doit accepter tout brouillage reçu, y compris un brouillage susceptible de provoquer un fonctionnement indésirable.

Appendix

Support

Thank you for purchasing this Verkada product. If for any reason you're experiencing issues or need assistance, please contact our 24/7 Technical Support Team immediately.

Sincerely,
The Verkada Team
verkada.com/support